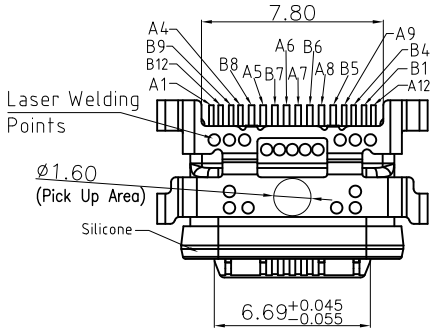

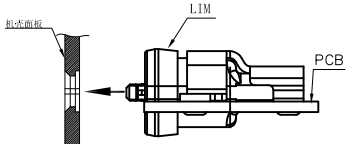

前后组装方式

Mated Condition(REF.)

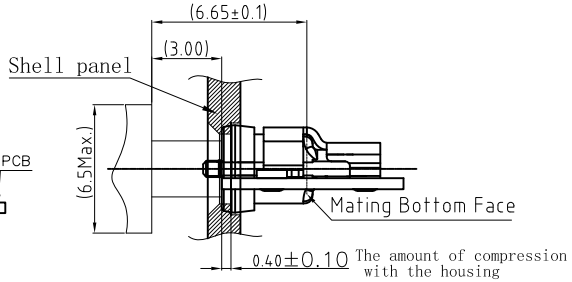

Sealing method(for reference only)

1. Material/Plated
1.1 Housing: High temperature thermoplastic, Black UL 94V-0.
1.2 Terminal: Copper Alloy, Gold Flash Plated Overall
1.3 Outer Shell: Stainless Steel, Nickel plated, Tail G/F Plated
1.4 Inside Shell: Stainless Steel
1.5 Solder-Plate: Stainless Steel
1.6 Middle Plate: Stainless Steel, Nickel plated
7 LIM: Silicon, Black
1.8 Epoxy: Epoxy, Black
2. Electrical Performance
2.1 Rated Voltage: 30V AC
2.2 Rated Current: 3.0A Max.
2.3 Contact Resistance: 40mΩ Max.
2.4 Insulation Resistance: 100MΩ Min.
2.5 Dielectric Strength: 100V AC
3. Mechanical Performance
3.1 Insertion Force: 6-20N(After:5-20N)
3.2 Withdraval Force: 8-20N(After:6-20N)
3.3 Durability: 10000 Cycles
4. Operating Temperature: -25° C To +85° C
5. Waterproof: IPX8

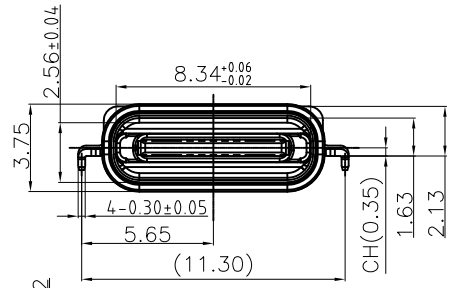

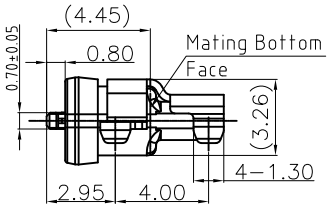

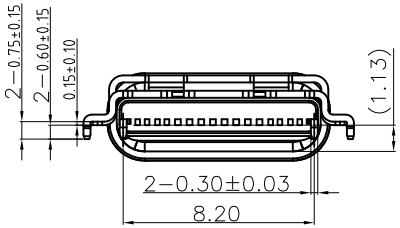

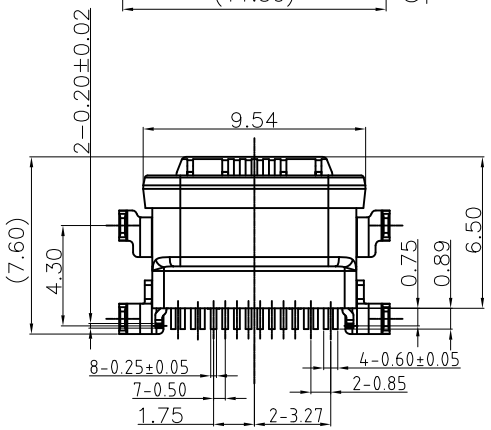

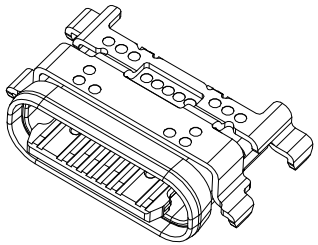

Connector Pin Assignments

A1	GND	B12	GND
A4	VBUS	B9	VBUS
A5	CC1	B8	SBU2
A6	DP1	B7	DN2
A7	DN1	B6	DP2
A8	SBU1	B5	CC2
A9	VBUS	B4	VBUS
A12	GND	B1	GND
PIN	SIGNAL NAME	PIN	SIGNAL NAME

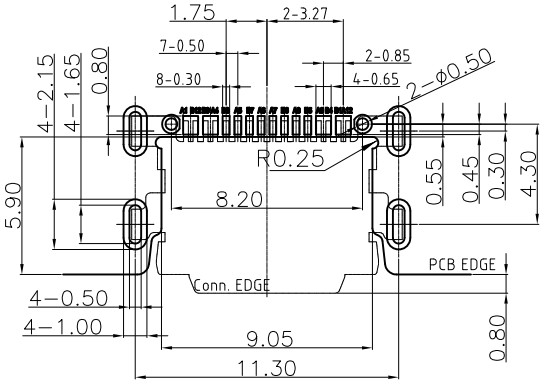

RECOMMENDED PCB LAYOUT
TOLERANCE UNSPECIFIED: ±0.05mm

REV.	DESCRIPTION	ECN NO.	NAME	DATE
A	NEW RELEASE		Tom	2023-12-20

REVISIONS

DRAWN	Tom	2023-12-20
CHECKED	Ango	2023-12-20
APPROVE	Kevin	2023-12-20

SCALE: N/A SHEET: 1 OF 1

DIMRNSION TOLERANCE
X
X.X ±0.35
X.XX ±0.25
X.XXX ±0.15
GENERAL ANGLE: ±3°
UNIT: mm
LEVEL CXX

实邦® SHIBANG 东莞市实邦电子有限公司
Dongguan Shibang Electronic Co., Ltd.

TITLE	USB TYPE-C F 16P WATERPROOF IPX8
PART NO.	UCX-075C1A
DWG. NO.	

TK-RD-001A